SOHNNE®



Sohnne

Aurora Bed

The Aurora draws its detail into the leather itself. A grid of large square panels is formed across the headboard by recessed seams alone — no buttons, no pulled tufting — each panel swelling softly between the stitch lines, and the whole panel sweeping in a shallow concave curve along its top edge so a tall headboard still reads light. Front and back are finished identically, so the bed works against a wall or floating in the room. Below, the leather-wrapped platform rolls off at a soft rounded edge and rests on two angled steel runners set well in from the ends, leaving the corners open and the floor clear.

MATERIALS:

Internal Frame:	Kiln-dried timber with steel reinforcement, fully concealed within the upholstery
Headboard:	Shaped panel with a concave top edge, upholstered identically front and back
Padding:	High-resilience polyurethane foam with a polyester fibre wrap
Platform:	Timber frame wrapped in leather with a rounded lower edge and horizontal seams
Base:	Powder-coated steel sled, formed as two angled runners with protective floor pads
Cover:	Cream leather, single-needle stitched with recessed panel seams
Slatted Base:	Sprung timber slats on a central support

FEATURES:

Panelled Headboard:	A grid of large square panels is drawn into the leather by recessed seams alone — no buttons, no pulled tufting — with each panel swelling softly between the stitch lines
Curved Top Edge:	The headboard sweeps in a shallow concave curve along its top, so a tall panel reads lighter than its height and follows the shoulders when you sit up
Finished Both Sides:	Front and back are upholstered identically, right down to the panel grid, so the bed can sit away from a wall without a rough side
Floating Sled Base:	Two angled steel runners set well in from the ends carry the frame, leaving open space beneath the platform and the floor clear at both corners
Rounded Platform Edge:	The leather-wrapped frame rolls off softly at its lower edge with a single horizontal seam, keeping a hard corner off the walkway
Sprung Slat Base:	Timber slats on a central support flex under weight and let the mattress breathe from below
Maintenance:	Wipe leather with a soft dry cloth and condition periodically; wipe the metal base with a dry cloth and keep out of prolonged direct sunlight
Assembly:	Assembly required — headboard and side rails join to the platform, sled base attaches beneath

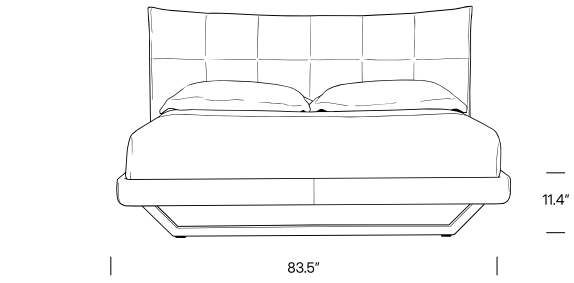

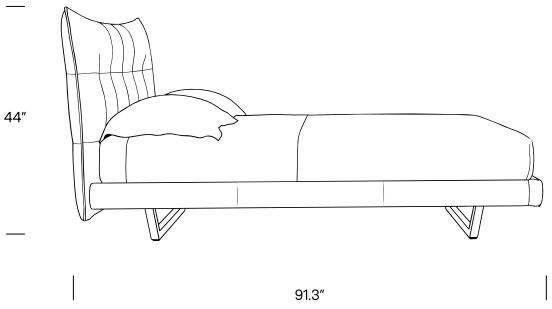

DIMENSIONS:

Bed:	83.5 W x 91.3 D x 44.9 H inches
Headboard Height:	42.5 inches
Platform Height:	11.4 inches
Package Dimension:	85.0 W x 92.8 D x 46.4 H inches