SOHNNE®



Sohnne

Milan Oval Dining Table

The Milan Oval Dining Table runs just over eight feet on a single base. Grey and charcoal veins branch across a pale polished top that thins toward its rim, softening the mass of a slab this size. Beneath it, the pedestal is built from vertical marble slabs of the same stone — flat faces alternating with rounded ones, set with narrow gaps that catch shadow and keep the base from reading as a block. No corner legs, no stretcher, no visible hardware. The full perimeter stays clear, and the oval seats ten without a single obstruction underneath.

MATERIALS:

Top:	Solid veined white marble, polished finish
Edge:	Tapered profile with a soft rounded rim, hand-shaped and polished
Pedestal:	Solid marble slabs of the same stone, cut and polished as flat and rounded faces
Assembly Fixings:	Concealed stone-to-stone seating, no visible hardware
Sealant:	Penetrating stone sealer applied to all surfaces

FEATURES:

Veined Marble Top:	Grey and charcoal veins branch across a pale polished ground, drawn from the stone itself — the pattern is unique to every table
Tapered Oval Rim:	The top thins toward the edge with a soft rounded profile, so a slab this size reads light from across the room, with the veining wrapping from the face around the rim
Fluted Slab Pedestal:	The base is built from vertical slabs of the same marble, flat faces alternating with rounded ones, with narrow gaps between them that catch shadow and break up the mass
Single Central Base:	One pedestal carries the full length of the oval with no corner legs and no stretcher, leaving the perimeter clear for chairs at every position
Seats Ten:	98.2 inches long and 39.4 inches deep — comfortable place settings for ten with room to serve down the centre
Maintenance:	Wipe with a soft damp cloth and a pH-neutral stone cleaner; blot spills promptly and reseal periodically. Avoid acidic cleaners, vinegar and citrus
Assembly:	Two-part assembly — pedestal positioned first, top set in place. Professional installation recommended

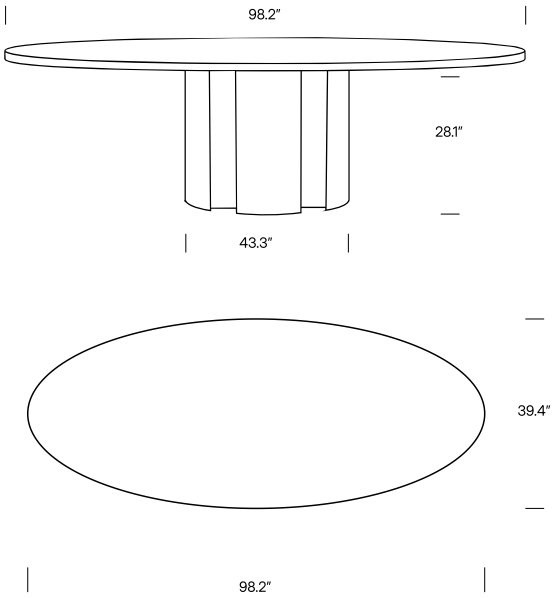

DIMENSIONS:

Table:	98.2 W x 39.4 D x 29.5 H inches
Top Thickness:	1.4 inches
Base:	43.3 W x 19.7 D x 28.1 H inches
Weight:	Top 264 lbs / Base 218 lbs
Package Dimension:	Top: 99.7 W x 40.9 D x 2.9 H inches / Base: 44.8 W x 21.2 D x 29.6 H inches