SOHNNE®



Sohnne

Arca Table

The Arca Table is cut from solid travertino classico. Two matched slabs form the top, split along the center so the seam reads as a drawn line, not a join to hide. The underside is chamfered, so a heavy top looks thin from the side.

MATERIALS:

Top:	Solid travertino classico, two matched slabs
Edge Profile:	Chamfered underside, tapering thinner toward the ends
Pedestals:	Solid travertino classico, four cylinders meeting in a clover section
Finish:	Honed and sealed, open pore, low sheen

FEATURES:

Split Surface:	Two matched slabs meet along the centre line, the seam running the full length as a drawn line rather than a join to hide
Clover Pedestals:	Each base is four cylinders converging into one form — round from every approach, never a flat face
Elongated Octagon:	The top tapers toward each end, narrowing the silhouette without shortening the table
Chamfered Edge:	Underside cut away so a thick slab reads as a thin line from seated height
Open-Pore Finish:	Left unfilled so the natural pitting of the stone stays visible and tactile
Natural Variation:	Cut from a single block — banding, pitting, and tone are unique to each table
Maintenance:	Wipe with a soft damp cloth; blot spills immediately; avoid acidic cleaners on stone
Assembly:	Slabs rest on pedestals; white-glove placement recommended

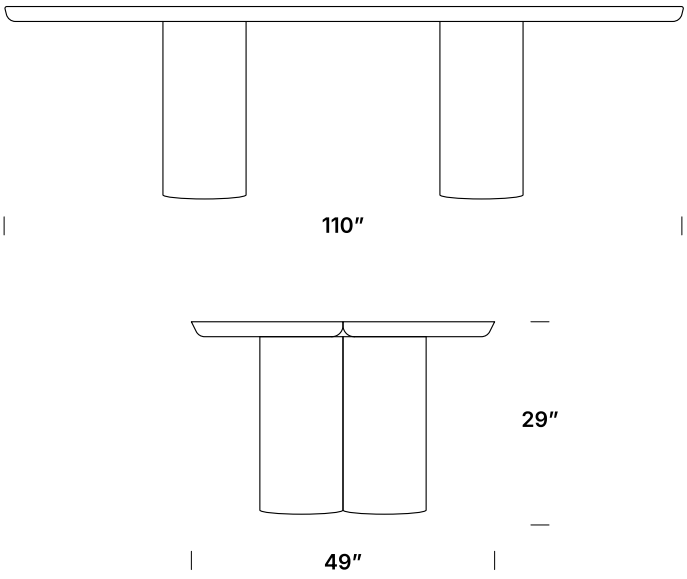

DIMENSIONS:

Table:	110 W x 49 D x 29 H inches
Package Dimension:	111 W x 50 D x 30 H inches