SOHNNE®



Sohnne

The Small Silver Table

Inspired by late 1940s design, the Small Silver Table blends sculptural detail with everyday functionality in a more compact form. Crafted for smaller spaces, its finely finished tabletop opens smoothly to add extension leaves, guided by subtle hand-shaped details that enhance both ease of use and visual elegance.

MATERIALS:

Tabletop:	Wood veneer or linoleum with solid wood edges
Frame:	Solid oak or walnut
Extension Leaves:	Matching veneer or linoleum (two included)

FEATURES:

Compact Extendable Design:	Ideal for smaller spaces with flexible seating needs
Smooth Extension Mechanism:	Table opens easily without shifting the legs
Refined Hand-Finished Details:	Subtle edge indentation improves grip and usability
Material Options:	Multiple wood and surface combinations available
Sculptural Presence:	Balances artistic detail with everyday practicality
Stable Solid Wood Frame:	Ensures strength and long-term durability
Assembly:	No assembly required

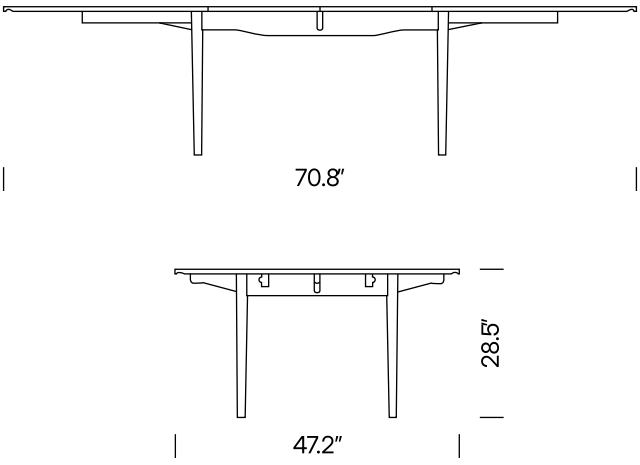

DIMENSIONS:

Without Extensions:	70.8 W x 47.2 D x 28.5 H inches
With Extensions:	114.1W x 47.2 D x 28.5 H inches
Weight:	152 lbs
Package Dimension:	70.8 W x 47.2 D x 28.5 H inches