SOHNNE®



Sohnne

Corbusier LC3 Grand Modele Sofa

Inspired by the modernist vision of 1928, the LC3 Grand Modele Sofa reimagines the relationship between structure and comfort. Its exposed tubular steel frame contrasts beautifully with generous, resilient cushions. The result is a timeless icon that adds architectural presence, comfort, and elegance to any modern space.

MATERIALS:

Upholstery:	Aniline leather
Frame:	#304 stainless steel with polished chrome finish
Frame Support:	Welded, angled steel
Cushion Core:	High-resilience foam
Top Layer:	Goose down blend
Ferrules:	Stainless steel with protective rubber rings

FEATURES:

Double Stitching:	Reinforced seams ensure strength and prevent wear over time
Matte Leather:	Natural finish creates a refined, timeless look and feel
Steel Corners:	Precision-crafted corners add both stability and modern style
Wide Armrests:	Designed for everyday comfort and relaxed support
Removable Cushions:	Simple to clean and maintain for lasting freshness
Assembly:	No assembly required

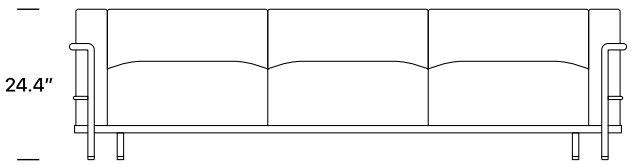

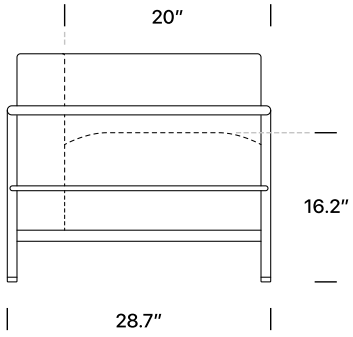

DIMENSIONS:

Overall:	93.3 W x 28.7 D x 24.4 H inches
Seat Height:	16.2 inches
Seat Depth:	20 inches
Weight:	154 lbs
Package Dimension:	94.3 W x 29.7 D x 25.4 H inches