SOHNNE®



Sohnne

Ploum Loveseat High Back

The Ploum Sofa is a sculptural masterpiece that merges artistic design with unparalleled comfort. Crafted to redefine modern lounging, its unique form, plush cushioning, and eco-conscious materials reflect an innovative approach to furniture design. This sofa has a stretchy double-layer fabric made of 68% eco-friendly polyester and 32% wool, and its solid steel-tube frame with wire and mesh base delivers strength and stability.

MATERIALS:

Upholstery:	Stretchable quilted fabric made of 68% eco-friendly polyester and 32% wool
Padding:	High-resilience Bultex® multi-density foam
Frame:	Solid construction with steel tubing, wire, and mesh base
Fabric Finish:	Double-layer quilted texture crafted for a smooth and sophisticated feel

FEATURES:

Ergonomic Design:	Continuous curves create a balanced, even-support backrest
Seating Capacity:	Comfortably accommodates up to four people for relaxed gatherings
Reclined Support:	Deeper right-hand seat for semi-reclined positions
Durability:	Premium stretch fabric maintains its shape and pristine appearance
Seamless Detailing:	Tailored stitching reinforces structure
Floor Protection:	Non-slip base with upgraded ferrules
Assembly:	No assembly required

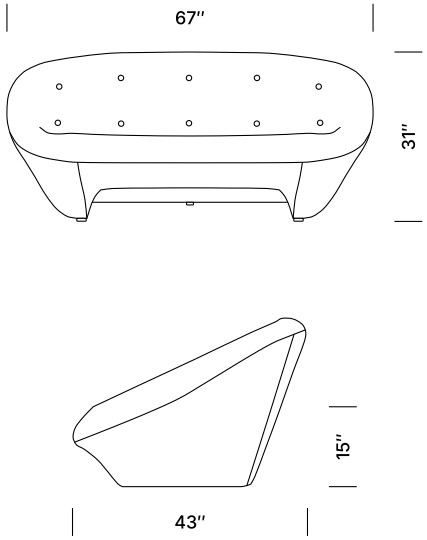

DIMENSIONS:

Loveseat:	67 W x 43 D x 31 H inches
Seat Height:	15 inches
Weight:	121.3 lbs
Package Dimension:	68 W x 44 D x 32 H inches