SOHNNE®



Sohnne

Fritz Coffee Table 39"

The Fritz Coffee Table draws inspiration from the globally-recognized modern furniture design. Made from durable galvanized sheet metal and wood, it is supported by sleek stainless steel tubing. The signature square top offers plenty of surface space for decor or everyday use. This table brings both style and practicality to any contemporary living room. It seamlessly fits into your space while providing lasting appeal.

MATERIALS:

Tabletop:	Engineered wood (laminated or powder-coated MDF)
Frame:	Polished stainless steel tubular frame (8K mirror finish)
Base:	Powder-coated steel
Connectors:	Industrial-grade steel
Ferrules:	High-durability rubber feet

FEATURES:

Tabletop Space:	Ample surface for multitasking
Modular Design:	Adapts to work, dining, or studio environments
Surface Protection:	Scratch-resistant and fireproof coating
Ergonomic Comfort:	Suitable for both seated and standing use
Structural Strength:	Steel base ensures high load-bearing capacity
Low Maintenance:	Water-resistant surface for easy cleaning
Rounded Edges:	Designed for visual softness and child safety
Floor Stability:	Adjustable rubber feet for uneven surfaces
Assembly:	Minimal assembly required

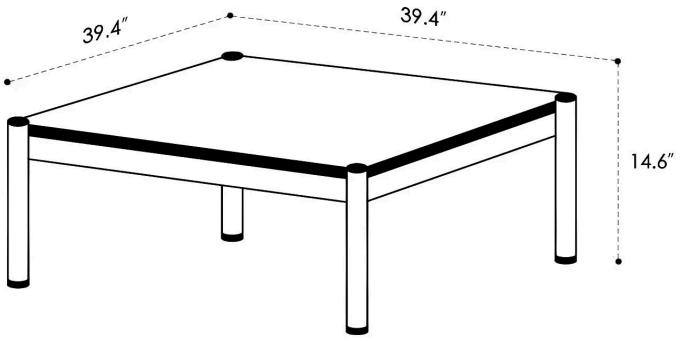

DIMENSIONS:

Table:	39.4 W x 39.4 D x 14.6 H inches
Weight:	85 lbs
Package Dimension:	40.4 W x 40.4 D x 15.6 H inches