SOHNNE®



Sohnne

Superloon Floor Lamp

Born in the era of modern minimalism, the Superloon Floor Lamp captures the serene glow of moonlight through its circular, edge-lit diffuser. Its sculptural frame and 360-degree rotation bring both versatility and presence, while warm-dimming technology lets you fine-tune the light's tone and intensity to suit any atmosphere.

MATERIALS:

Disc Diffuser:	Silk-screened PMMA
Body & Head:	Painted or chrome-plated aluminum
Joints:	Die-cast aluminum with extruded stem
Power Cord:	98.4 inch (250 cm) plug-in adapter

FEATURES:

Iconic Design:	Moon-inspired disc with a minimalist profile
Adjustable Rotation:	Full 360° rotation for flexible lighting
Dimmer Sensor:	Soft Touch and optical dimmer for precise control
Edge Lighting:	Even, warm glow for ambient illumination
Maintenance:	Simple to clean and care for
Assembly:	Minimal assembly required

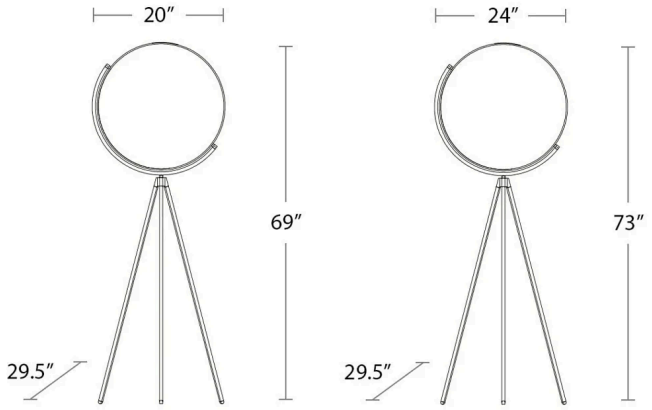

DIMENSIONS:

Small (ø 20):	20 W x 29.5 D x 69 H inches
Large (ø 24):	24 W x 29.5 D x 73 H inches
Weight (Small):	12.6 lbs
Weight (Large):	18.7 lbs
Package Dimension (Small):	21 W x 30.5 D x 70 H inches
Package Dimension (Large):	25 W x 30.5 D x 74 H inches